Taurian® MPS

TJ Series™

JAW CRUSHER

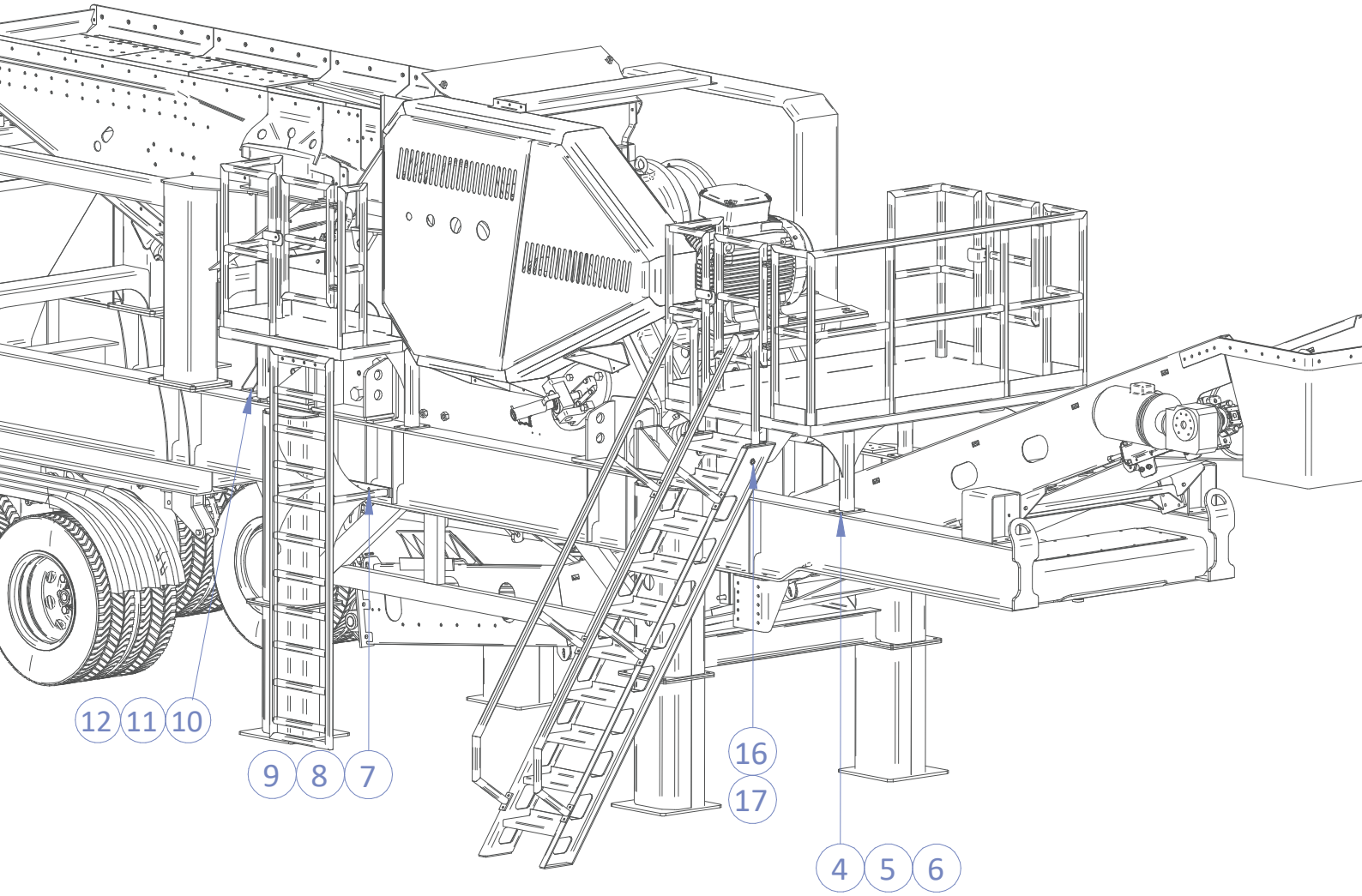

21 Years of Experience

Start to Success, Together

With over 21 years of expertise, Taurian™ has established itself as a leading Indian manufacturer of crushing and screening equipment for aggregates, mining, and mineral processing. The name Taurian™ stands for excellence and reliability globally.

Founded by industry experts, Taurian™ has evolved from a family business to India's only public limited company in its field. Focused on long-term value and quick ROI, Taurian™ has strategic partners with top U.S. and European firms to deliver superior products that meet global industry standards.

Whether you're an experienced veteran or new to the industry, Taurian™ offers extensive support to the global aggregate market through its leading brands, including Taurian MPS™, Terratrak™, Cyclowash™ and Stackmax™.

A Legacy of Excellence

Since being established in the early 2000s, Taurian™ has installed over 800+ Jaw Crushers across India with over 300+ belonging to the upgraded TJ Series™ which was first introduced in 2017. TJ Series™ jaw crushers are built on the success of our 12+ years of NDJC Series™ Jaw Crusher experience. The NDJC Series™ set the standard in the industry for its rugged construction and application versatility.

TJ 300 | Poonch, Jammu

Taurian™ guarantees service within 24 hours

Taurian™ Jaw crushers are built for endurance in their ability to handle all varieties of rock across the construction & mining industries. Coupled with low maintenance, Taurian™ guarantees service / parts delivery within 24-48 hours anywhere in India with our extensive network. Choose Taurian™ TJ Series™ for consistent, reliable, and high-performance crushing solutions designed to meet the demands of today's toughest applications.

The World's Leading Modern Jaw Crusher

Taurian™ TJ Series™ jaw crushers feature a pinned and bolted, non-welded frame construction. This design concept has been proven with FEM calculations, simulations and most importantly in the harshest real-life applications. This, combined with high-quality steel casting design and largest in class size roller bearings when compared to competitors, delivers the reliability and strength that defines TJ Series™ jaw crushers.

The Journey
through the years

TJ 300 | Kekri, Rajasthan

2005 – The Beginning of a Vision

Born in Roorkee, Uttarakhand, we set out with a bold vision — to redefine India's crushing and screening industry through innovation, reliability, and cost-efficiency. What began as an idea soon became a mission to empower mining and construction businesses with smarter, stronger solutions.

2010 – Revolutionized Sand Production

Introduced Falcon VSI crushers for improved sand production and shaping and GS series cone crushers designed for secondary and tertiary crushing.

That same year, we commissioned our first major crushing plant in Eastern India, marking the beginning of our journey toward engineering excellence.

2014: Mobile Equipment Introduction

Wheeled Crushing Units: Developed and commissioned wheel mounted crushing plant for easier in pit crushing and road construction projects.

Track Screening Unit: Introduced the Panther Series for screening fly ash and coal, with completely mobile diesel-powered units.

2016: Restructuring and Expansion

Expanded our presence into every single state in India, firmly establishing our brand nationwide. This extensive reach enabled us to serve diverse markets, strengthen customer relationships, and position ourselves as a trusted leader in the crushing and screening industry across the country.

2020: The Terratrak Revolution

We disrupted convention again with the Terratrak Series — India's first hybrid track-mounted crusher, cutting fuel costs by up to 80% while delivering uncompromised power and sustainability.

2023: Cyclowash Series

Launched the Cyclowash washing systems, giving customers an advanced, efficient, and eco-friendly solution for aggregate washing — a perfect synergy of technology and trust.

2024: Global Expansion and Strategic Growth

Built a strong international dealer network across continents.

Formed a strategic joint venture with a leading European engineering powerhouse, expanding our reach into global mining and metals markets.

Introduced the Stackmax Conveyor Systems — telescopic, track-mounted, and engineered for large-scale mining and port operations.

2025: IPO Launch: A New Era Begins!

Our IPO launch marks a defining moment in our journey — a reflection of two decades of innovation, integrity, and investor confidence.

The next chapter begins, powered by the same spirit that started it all — engineering the future of crushing and screening.

2026: MiningWorld Russia, Moscow

A proud new chapter as Taurian MPS showcased its capabilities at MiningWorld Russia 2026, strengthening our global presence and connecting with the mining industry on an international stage.

Designed for Maximum Productivity

Hardox lined feed chute efficiently manages the coarsest materials
Pitman eye protection plate provides additional protection

Long ribbed bi-directional castings provide additional strength and resistance

Protection plates behind the jaw dies protect the steel castings against wear

Optional Parts
- Types of Jaw plates
- Corrugated
- Heavy-Duty
- Titanium Carbide Inserts
- Plant Automation

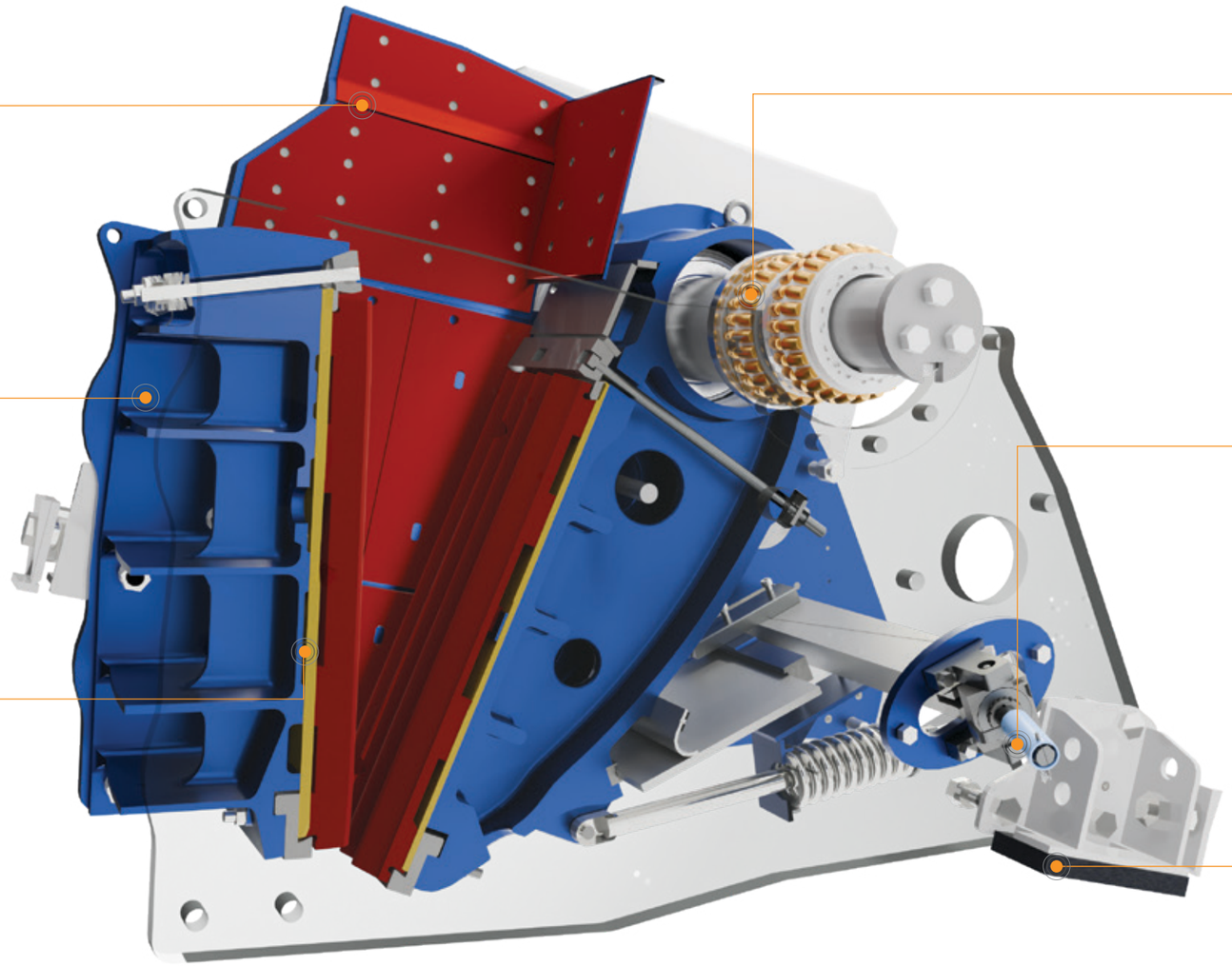

Large cast steel spherical roller bearings which are sealed by a labyrinth

Easy wedge adjustment system allows quick CSS setting without shim plates
Adjustments are mechanical as standard
A fully automatic hydraulic option is also available to make adjustments even faster and safer

Rubber dampers and support brackets absorb all vibrations
No anchor bolts are needed for installation

Modular Design

The TJ Series™ showcases a unique non-welded frame construction. It features two hot-rolled steel side plates and high-quality cast steel frames, securely fastened with bolts passing through precision-machined bosses. This bolted design eliminates stress inducers like weld seams, ensuring excellent durability against shock loads and reducing the likelihood of cracks or failure over time.

The brilliance of the TJ Series™ lies in its modular design, enabling straightforward assembly and disassembly, making it ideal for confined spaces like underground mines or remote locations. With its pinned and bolted construction, each component is easily replaceable without the need to dismantle the entire structure, significantly reducing downtime and maintenance costs. Additionally, this design provides flexibility to accommodate operational expansions or upgrades without requiring major alterations.

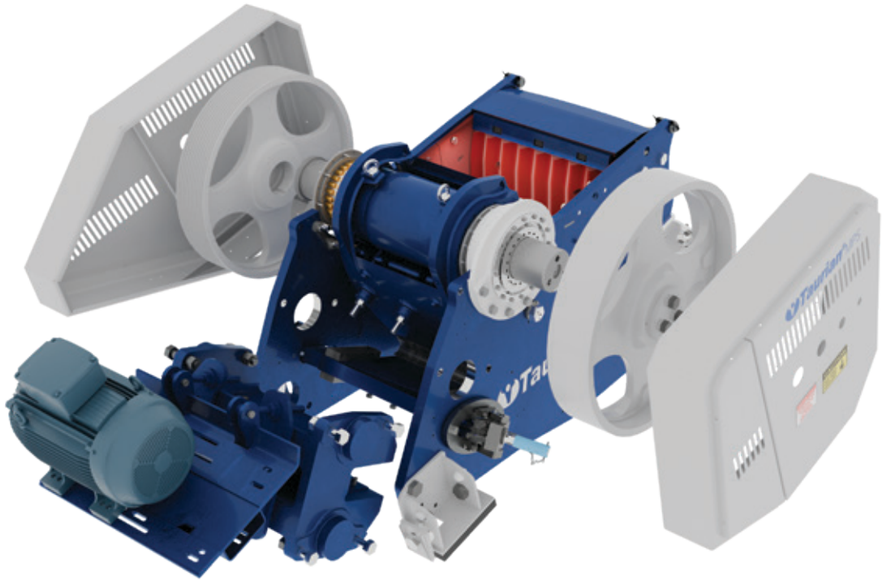

Choosing the Taurian™ TJ Series™ is an investment in a versatile, reliable, and durable solution designed to enhance operational efficiency. With its ability to simplify processes, optimize performance, and provide long-lasting reliability, the TJ Series™ ensures consistent results, making it the ideal choice for demanding applications that require endurance.

Modernised Crushing

Integral Motor

The integral motor base, mounted directly onto the crusher's main frame, optimizes spatial configurations and eliminates the need for long V-belts. This design ensures synchronous movement, enhancing V-belt life, while improving overall mechanical efficiency and stability. The base's rotational pivot design allows precise V-belt tensioning and maintains optimal alignment between the motor and crusher shaft, maximizing belt life and improving overall mechanical efficiency, power transmission, and stability.

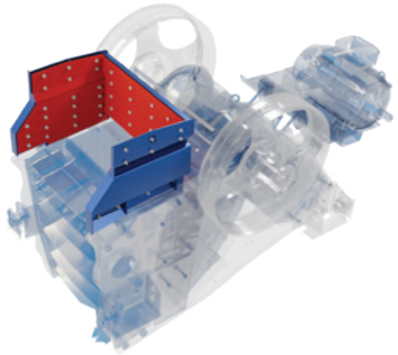

Custom Feed Chute

The feed chute guides material into the crusher's cavity efficiently and can be removed for maintenance without displacing the crusher. Jaw and cheek plate removal can be performed independently, and the chute is bolted for easy access during servicing. The Feed Chute effectively protects the crusher and can be removed from the crusher for maintenance purpose.

Rubber Dampers & Stoppers

Rubber dampers and stoppers efficiently cushion the crushing loads transmitted to the foundation, absorbing peak shock loads and allowing vertical and longitudinal movement of the crusher. This innovative system eliminates the need for anchor bolts, offering a more desirable solution that prevents the damage to jaw crusher foundations caused by anchor bolts.

Case Study

Mr. Nilesh Mhatre,
Owner of Govardhani Constructions Company (GCC)

After experiencing Taurian's machines, I'm convinced there's no better choice. This marks my second investment in a 3 stage plant from Taurian™. Their ability to deliver with almost 0 downtime was a game changer for us.

-**Mr. Nilesh Mhatre, GCC**

Enhanced Productivity and Performance with Taurian™ Jaw Crusher TJ300

Govardhani Constructions (GCC), a major aggregates supplier for projects like Navi Mumbai Airport, partnered with Taurian™ for reliable, long-term crushing solutions.

Challenge: To meet output demands for ongoing and future mega projects, GCC sought a reliable solution. With Taurian's 3-stage plant featuring VSI and jaw crushers, Mr. Mhatre aimed to double output and minimize downtime for enhanced operational efficiency.
Recognizing the need for higher capacity, the solution had to integrate seamlessly with the existing plant while maximizing efficiency.

Solution: GCC's growing production demands and minimize downtime, Taurian commissioned a second 250 TPH 2-stage plant. The modular design of the TJ300 allowed for seamless integration into the existing setup, ensuring minimal disruption during installation. This strategic expansion boosted production capacity, enabling GCC to meet the high output requirements of their ongoing and future mega infrastructure projects efficiently.

Results: The new 250 TPH plant increased production to over 100,000 tons monthly. Taurian crushers ensured high efficiency, minimized downtime, and delivered cost savings through extended equipment life and reduced maintenance requirements.

Conclusion: Taurian's advanced jaw crushers and swift support have empowered GCC to meet high demands with minimal disruptions, solidifying their leadership in the competitive aggregates market through state-of-the-art technology and reliable performance.

TJ300 | Belapur, Maharashtra

Technical Specification

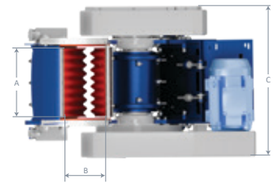

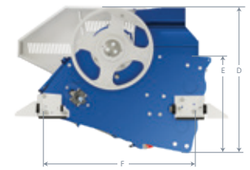

Dimensions

Model	Unit	TJ 100	TJ 150	TJ 200	TJ 300	TJ 350	TJ 400	TJ 500
A	mm	800	930	1060	1150	1200	1250	1400
B	mm	510	580	700	800	870	950	1070
C	mm	1526	1755	2060	2400	2690	2800	3010
D	mm	1750	1970	2490	2730	2940	2980	3140
E	mm	1200	1370	1650	1790	1960	2100	2260
F	mm	2100	2500	2630	2885	2820	3470	3755

Power & Weight

Model	TJ 100	TJ 150	TJ 200	TJ 300	TJ 350	TJ 400	TJ 500
Feed opening	800 x 510 mm	930 x 580 mm	1060 x 700 mm	1150 x 800 mm	1200 x 870 mm	1250 x 950 mm	1400 x 1070 mm
	32 x 20 in	37 x 23 in	42 x 28 in	45 x 32 in	47 x 34 in	49 x 37 in	55 x 42 in
Max feed size	400 mm	464 mm	560 mm	640 mm	696 mm	760 mm	856 mm
Capacity	55-370 TPH	105-430 TPH	150-560 TPH	165-580 TPH	175-595 TPH	245-830 TPH	325-925 TPH
CSS range	40-175 mm	60-175 mm	70-200 mm	70-200 mm	70-175 mm	100-250 mm	125-250 mm
Speed	350 rpm	330 rpm	280 rpm	260 rpm	230 rpm	220 rpm	220 rpm
Motor	75 kW	90 kW	110 kW	132 kW	160 kW	160 kW	200 kW
Weight	9520 kg	11870 kg	17050 kg	21500 kg	29300 kg	43910 kg	54010 kg

Capacities & CSS

Model		TJ 100	TJ 150	TJ 200	TJ 300	TJ 350	TJ 400	TJ 500
Product size (mm)	CSS (mm)	TPH	TPH	TPH	TPH	TPH	TPH	TPH
0-60	40	60- 80						
0-75	50	70- 100						
0-90	60	85- 115	110- 140					
0-105	70	100- 140	130- 160	155- 190	165- 205	180- 245		
0-120	80	115- 155	145- 185	165- 215	180- 235	200- 275		
0-135	90	130- 180	165- 205	195- 240	205- 255	215- 310		
0-150	100	145- 195	180- 230	211- 270	225- 285	240- 330	250- 340	
0-185	125	180- 250	225- 285	260- 330	270- 345	290- 400	300- 410	330- 450
0-225	150	215- 295	270- 340	310- 390	320- 405	345- 480	350- 480	385- 535
0-260	175	250- 340	315- 395	360- 455	370- 465	390- 545	400- 550	440- 610
0-300	200			400- 505	410- 520		450- 620	500- 690
0-340	225						500- 690	555- 765
0-375	250						550- 760	615- 845

Taurian MPS reserves the right to make changes in specifications and other information contained in this publication without prior notice and the reader/ customer should in all cases consult Taurian MPS to determine whether any such changes have been made. This publication may / may not be reproduced and is intended for the exclusive use of Taurian MPS customer. Please note all technical specifications are indicative and may vary based on material, design modifications, or location-specific requirements.

No statement contained in this publication, including statements regarding capacity, suitability, or performance of products, shall be considered a warranty by Taurian MPS for any purpose or give rise to any liability of Taurian MPS.

Taurian MPS©2026. All rights reserved.

When only the best will do,

choose Taurian MPS.

TAURIAN MPS
HEADQUARTER

201-C, POONAM CHAMBERS A WING,
DR.ANNIE BESANT ROAD, WORLI,
MUMBAI 400 018
MAHARASHTRA

CONTACT : +91 22 4967 0682

TAURIAN MPS
FACTORY

KHASRA NO. 260/267,
LAKESHWARI BHAGWANPUR,
HARIDWAR 247661
UTTARAKHAND, INDIA

CONTACT : +91 86790 22057

Taurian® MPS