Taurian® MPS

Roll Crusher

RC Series

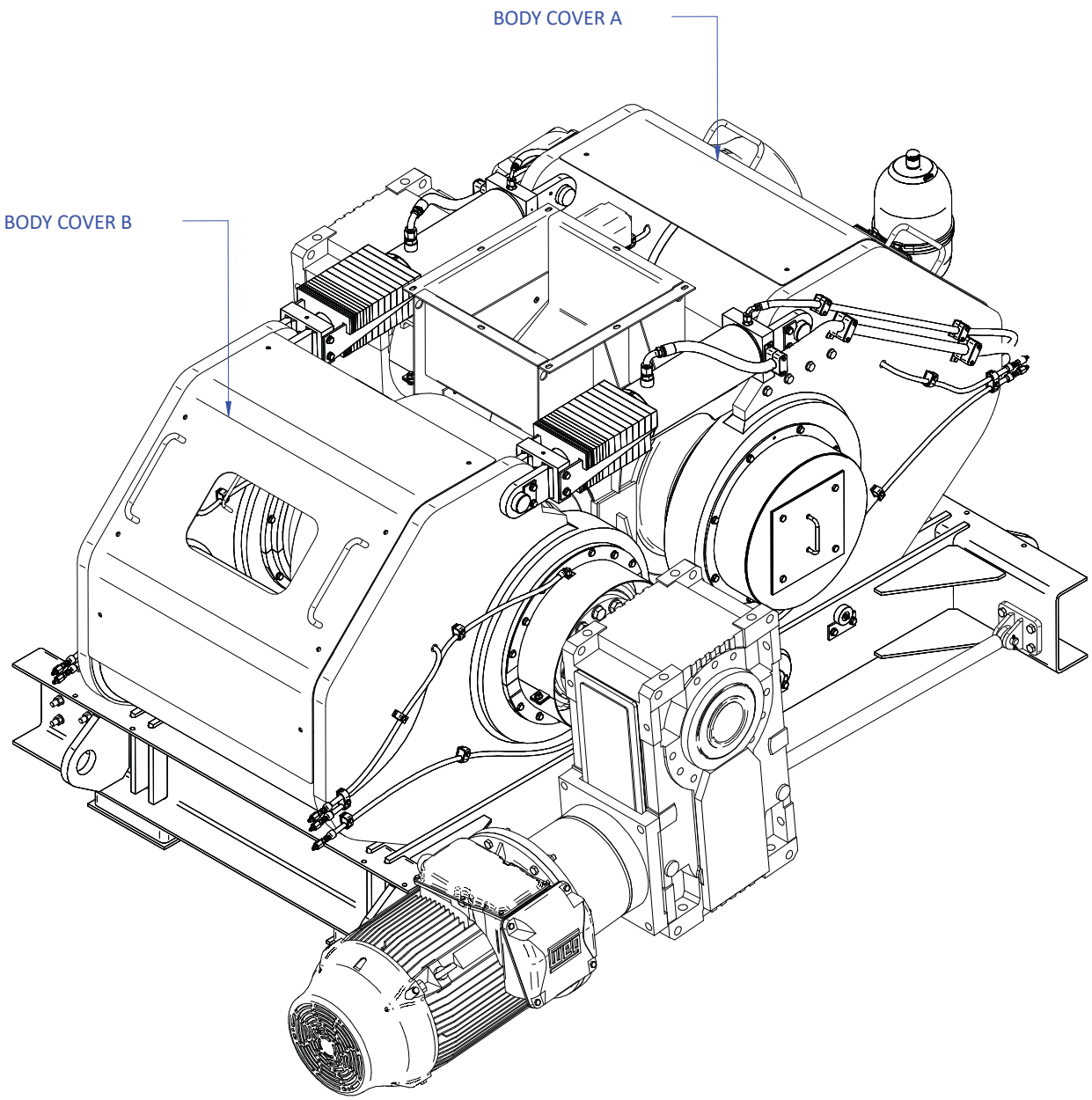

21 Years of Experience

Start to Success, Together

With over 21 years of expertise, Taurian™ has established itself as a leading Indian manufacturer of crushing and screening equipment for aggregates, mining, and mineral processing. The name Taurian™ stands for excellence and reliability globally.

Founded by industry experts, Taurian™ has evolved from a family business to India's only public limited company in its field. Focused on long-term value and quick ROI, Taurian™ has strategic partners with top U.S. and European firms to deliver superior products that meet global industry standards.

Whether you're an experienced veteran or new to the industry, Taurian™ offers extensive support to the global aggregate market through its leading brands, including Taurian MPS™, Terratrak™, Cyclowash™ and Stackmax™.

The Journey
through the years

2005 – The Beginning of a Vision

Born in Roorkee, Uttarakhand, we set out with a bold vision — to redefine India's crushing and screening industry through innovation, reliability, and cost-efficiency. What began as an idea soon became a mission to empower mining and construction businesses with smarter, stronger solutions.

2010 – Revolutionized Sand Production

Introduced Falcon VSI crushers for improved sand production and shaping and GS series cone crushers designed for secondary and tertiary crushing.

That same year, we commissioned our first major crushing plant in Eastern India, marking the beginning of our journey toward engineering excellence.

2014: Mobile Equipment Introduction

Wheeled Crushing Units: Developed and commissioned wheel mounted crushing plant for easier in pit crushing and road construction projects.

Track Screening Unit: Introduced the Panther Series for screening fly ash and coal, with completely mobile diesel-powered units.

2016: Restructuring and Expansion

Expanded our presence into every single state in India, firmly establishing our brand nationwide. This extensive reach enabled us to serve diverse markets, strengthen customer relationships, and position ourselves as a trusted leader in the crushing and screening industry across the country.

2020: The Terratrak Revolution

We disrupted convention again with the Terratrak Series — India's first hybrid track-mounted crusher, cutting fuel costs by up to 80% while delivering uncompromised power and sustainability.

2023: Cyclowash Series

Launched the Cyclowash washing systems, giving customers an advanced, efficient, and eco-friendly solution for aggregate washing — a perfect synergy of technology and trust.

2024: Global Expansion and Strategic Growth

Built a strong international dealer network across continents.

Formed a strategic joint venture with a leading European engineering powerhouse, expanding our reach into global mining and metals markets.

Introduced the Stackmax Conveyor Systems — telescopic, track-mounted, and engineered for large-scale mining and port operations.

2025: IPO Launch: A New Era Begins!

Our IPO launch marks a defining moment in our journey — a reflection of two decades of innovation, integrity, and investor confidence.

The next chapter begins, powered by the same spirit that started it all — engineering the future of crushing and screening.

2026: MiningWorld Russia, Moscow

A proud new chapter as Taurian MPS showcased its capabilities at MiningWorld Russia 2026, strengthening our global presence and connecting with the mining industry on an international stage.

Designed for Maximum Productivity

Feed Chute and Feeding System
Vertically aligned for choke feeding.
Durable Chute Lining
Adjustable gates for feed control
Minimizes bypass and ensures even wear.
Efficient Guidance to compression zone

Rollers
Two counter-rotating rolls (fixed and floating).
Optional Studded surface depending on feed
Interparticle comminution for uniform size reduction.
Optimized D:L ratios reduce recirculation.
Even pressure across the roll width.
High Pressure for efficient crushing.

Hydraulic System
Regulates roll movement and pressure.
Adjust pressure for desired product size.
Accumulator System: Absorbs shocks
from non-crushable materials.
Aligns rolls to ensure uniform crushing force.

Tramp Relief System
Accumulator Provides quick relief by releasing the roll from the set CSS position allowing the tramp material to pass

Control and Automation System
Adjust roll pressure, speed, and gaps.
Remote systems detect issues to reduce downtime.
Safety Alarms warn of risks or maintenance needs.
Operate and monitor safely from a distance.

Drive System
Motors with reducers and torque arms
Clutches protect against overloads.
Key Features:
Efficiency: VFDs optimize speed and energy use.
Power Transmission: Ensures smooth roll operation.
Motors with reducers and torque arms

Maintenance Features
Easy roll changes
Alignment Tools included for wear profile correction.
Hinged frames for quick access and repairs.

Arch Frame
Anti-skewing high strength structure.
Handles internal loads without stressing the base.
Prevents bearing and roller damage.
Compact Layout reduces installation cost

Wear Components
Adjustable walls for sealing and wear control.
Minimal wear parts to reduce costs
Manganese or Ni-hard rolls enhance life

Environmental Features
Noise and Dust Control: Enclosures reduce emissions.
Can save up to 50% energy compared to other methods.

Applications
Handles abrasive, moist, and fine feeds.
Produces cubical particles

Roll Crusher Working Principle

- Roll crusher operates through pressure control rather than gap adjustments.
- Product size is regulated by adjusting applied pressure.
- Size reduction occurs via inter-particle grinding, enhancing efficiency by distributing pressure from multiple directions.
- Particles fracture only when compressive strength is surpassed, ensuring precise pressure application for specific materials.
- Roll crusher bridges the gap between crushing and grinding, handling larger feed sizes than ball mills and delivering finer particles than cone crushers.

Traditional Crushing

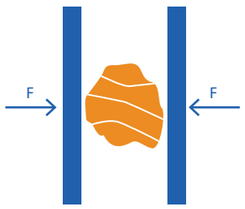

Roll Crusher Grinding

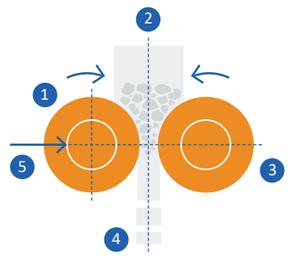

1. Floating roller
2. Feed material
3. Fixed roller
4. Compacted cakes
5. Grinding pressure

Grinding between rotating rollers

The Taurian roll crusher utilizes inter-particle comminution technology by compressing material between two counter-rotating rollers—one fixed and the other floating. The two rotating rollers exert such a high pressure that it compacts the feed to 85% of its solid volume, forcing particles to grind against each other and break down uniformly. The resulting product features a consistent particle size distribution with a significant proportion of fines. By ensuring superior grinding efficiency and optimized particle size, the Taurian roll crusher streamlines downstream processing.

Before Compression

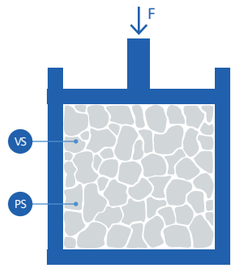

Bulk volume

PS Bulk density

After Compression

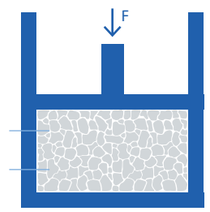

Slab volume

Slab density

Uniform Crushing Process

The feed chute design ensures that the crushing cavity consistently operates under choke feed conditions, optimizing the wear pattern of the rolls and promoting even load distribution across their surface

1. Material entering the roll crusher is choke-fed and accelerated to match the roll's peripheral speed. As the gap between the rolls narrows, the material is progressively compacted, and larger particles undergo pre-crushing.
2. Maximum force is applied to the material within the compression bed, causing particles to compress and disintegrate effectively between the rolls.

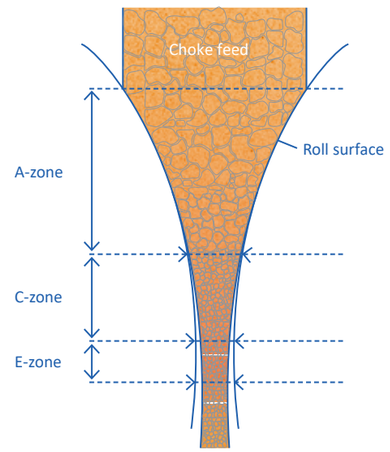

A-zone = Acceleration zone
C-zone = Compaction zone
E-zone = Expansion zone

Anti-Skewing Arch Frame

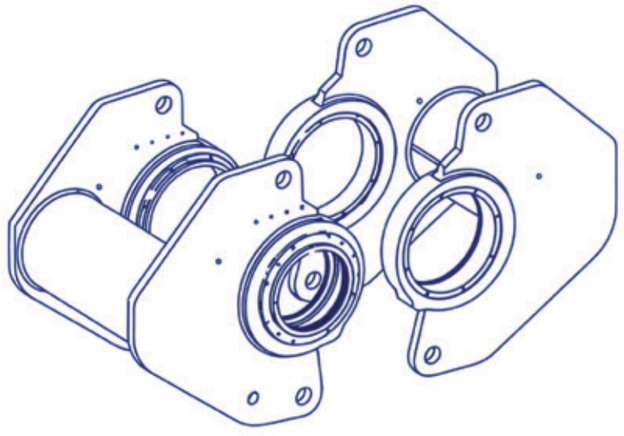

The unique arch frame, prevent these issues by maintaining alignment, ensuring consistent performance, protecting critical components, and reducing wear and energy inefficiencies.

What is skewing?

Skewing in HPGRs refers to the unintended lateral misalignment of one grinding roll relative to the other. This often occurs due to uneven feed distribution, varying ore hardness, or inconsistent particle sizes. Negative skewing leads to several critical issues:

1. Uneven Crushing: Misalignment causes inconsistent pressure distribution across the roll width, leading to poor product gradation and reduced crushing efficiency.
2. Excessive Wear: The uneven forces from skewing accelerate wear on the roll surfaces and bearings, increasing maintenance requirements and reducing component lifespan.
3. Equipment Damage: Misaligned rolls exert abnormal forces on the bearings and frame, leading to premature failures and costly repairs.
4. Energy Inefficiency: Skewing forces the machine to expend additional energy to compensate for misalignment, raising operational costs.
5. Operational Risks: Prolonged skewing can destabilize the machine, posing safety hazards and risking unplanned downtime.

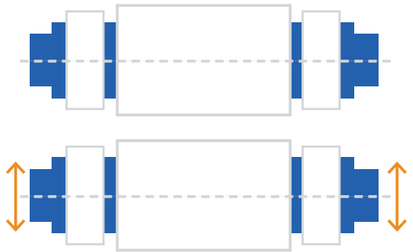

Feed: Even
Response: Parallel Gap

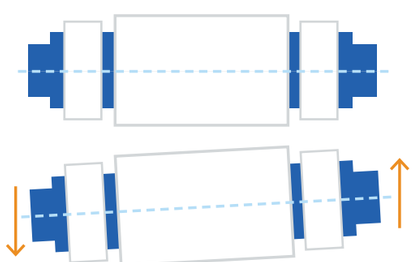

Feed: Coarse Particle Feed Left Side
Response: Gap Increased

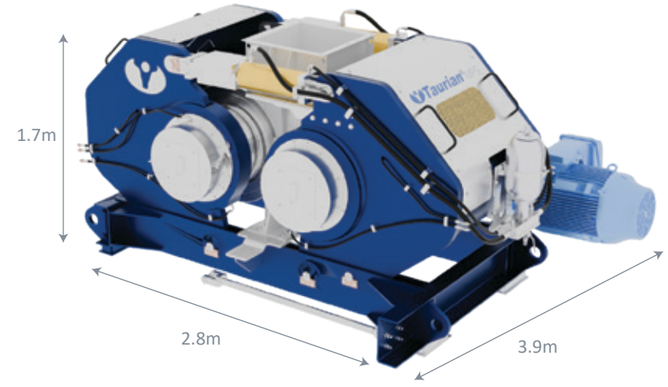

Technical Specification

Model	Max feed size	Capacity	Roll dimensions (Dia x Width)	Max roll speed	Power	Weight
TRC 800	32 mm	60-90 TPH	800 x 500 mm	30 rpm	2 x 75 kW	12900 kgs

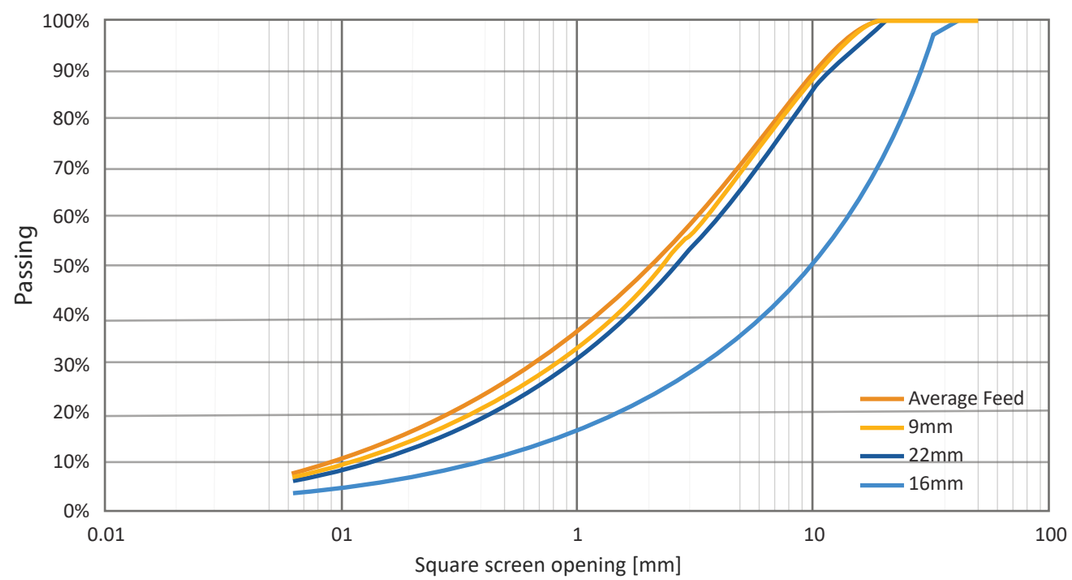

Taurian MPS reserves the right to make changes in specifications and other information contained in this publication without prior notice and the reader/ customer should in all cases consult Taurian MPS to determine whether any such changes have been made. This publication may / may not be reproduced and is intended for the exclusive use of Taurian MPS customer. Please note all technical specifications are indicative and may vary based on material, design modifications, or location-specific requirements.

No statement contained in this publication, including statements regarding capacity, suitability, or performance of products, shall be considered a warranty by Taurian MPS for any purpose or give rise to any liability of Taurian MPS.

Taurian MPS©2026. All rights reserved.

When only the best will do,

choose Taurian MPS.

TAURIAN MPS
HEADQUARTER

201-C, POONAM CHAMBERS A WING,
DR.ANNIE BESANT ROAD, WORLI,
MUMBAI 400 018
MAHARASHTRA

CONTACT : +91 22 4967 0682

TAURIAN MPS
FACTORY

KHASRA NO. 260/267,
LAKESHWARI BHAGWANPUR,
HARIDWAR 247661
UTTARAKHAND, INDIA

CONTACT : +91 86790 22057

Taurian® MPS