Taurian® MPS

WHEELER
A Taurian Brand

Hyperscreen
WHS 5518

21 Years of Experience

Start to Success, Together

With over 21 years of expertise, Taurian™ has established itself as a leading Indian manufacturer of crushing and screening equipment for aggregates, mining, and mineral processing. The name Taurian™ stands for excellence and reliability globally.

Founded by industry experts, Taurian™ has evolved from a family business to India's only public limited company in its field. Focused on long-term value and quick ROI, Taurian™ has strategic partners with top U.S. and European firms to deliver superior products that meet global industry standards.

Whether you're an experienced veteran or new to the industry, Taurian™ offers extensive support to the global aggregate market through its leading brands, including Taurian MPS™, Terratrak™, Cyclowash™ and Stackmax™.

Feeder
10” formed channel
12' x 42" belt feeder
Live vibrating grid with hydraulic angle adjustment
12" self-cleaning wing pulley
Belt: EP315/3 , cover : 5mm, 2mm

Hopper
6.5' x 11.5' top opening
Hydraulically adjustable sloped grizzly with 6” openings

Chassis
16" I-beam with king pin type hitch
Hydraulic landing gear for leveling of plant
Tandem axle assembly with eight (8) tires and mud flaps.
Leaf spring suspension, air brakes, rear taill ights

Power System
100 kVA Tier IV John Deere water cooled diesel engine
12 volt battery
mounted hydraulic pumps to operate all plant functions and two (2) off-plant hydraulically driven conveyors
NEMA-4 rated instrument panel
Emergency stops

Options
Bulkhead assisting ramping for loader feed to feed hopper
Remote control grizzly
Wings for funnelling feed material onto feed hopper
Vinyl dust cover

Consult factory for additional options

Plant Capacity
350 TPH
(tonnage varies with conditions)

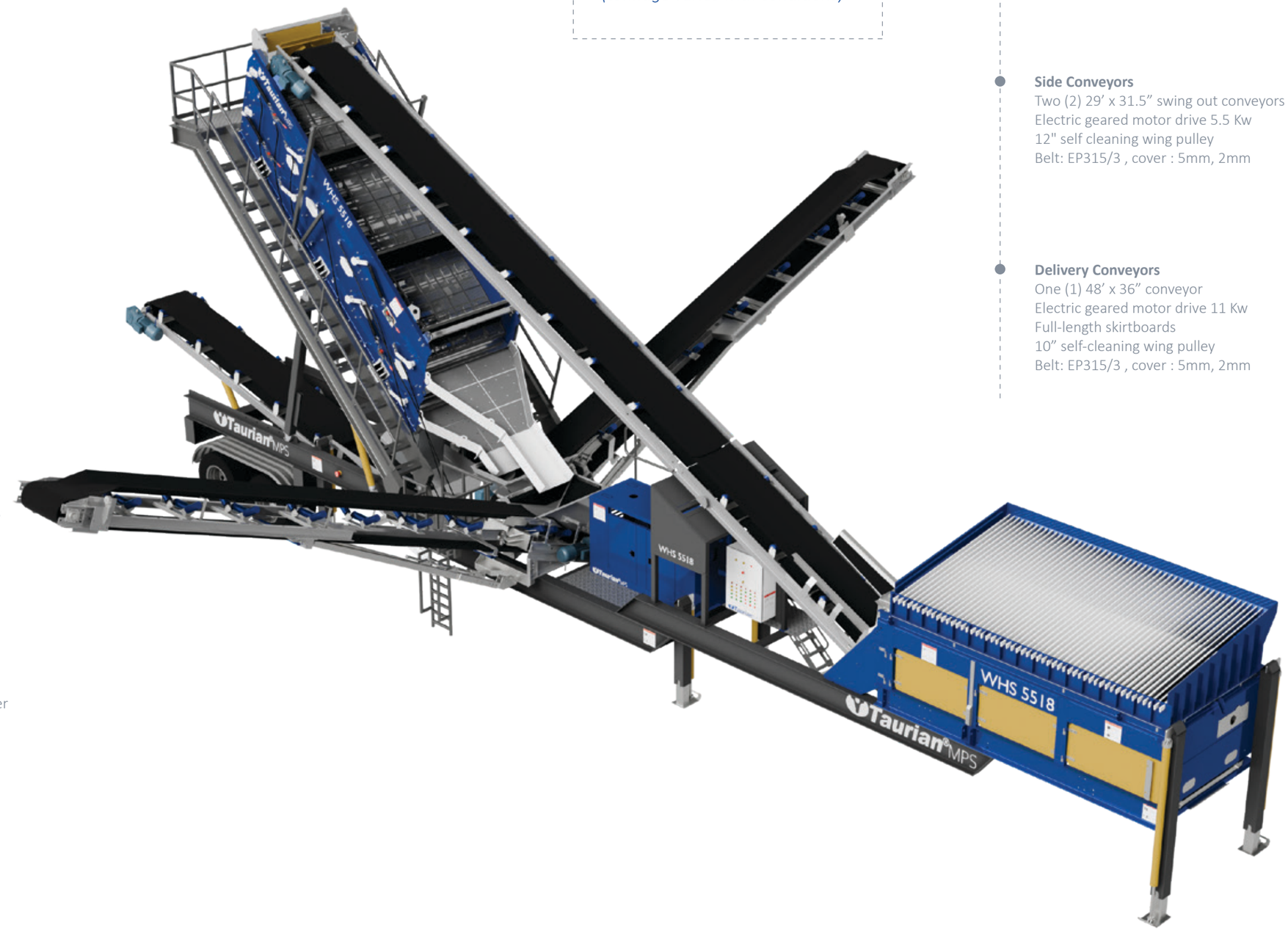

Fines Conveyor
One (1) 24' x 31.5" conveyor
Electric geared motor drive 5.5 Kw
Operates at: 9’3” discharge height
12” self-cleaning wing pulley
Belt: EP315/3 , cover : 5mm, 2mm

Side Conveyors
Two (2) 29’ x 31.5” swing out conveyors
Electric geared motor drive 5.5 Kw
12" self cleaning wing pulley
Belt: EP315/3 , cover : 5mm, 2mm

Delivery Conveyors
One (1) 48’ x 36” conveyor
Electric geared motor drive 11 Kw
Full-length skirtboards
10” self-cleaning wing pulley
Belt: EP315/3 , cover : 5mm, 2mm

Adjustable
Screening Angles

Wheeled Hyperscreen is a mobile screening unit engineered for precision separation of fine particles. Operating at 3600–4200 RPM, its high-frequency vibrations increase stratification and reduce blinding, significantly improving screening efficiency for materials like manufactured sand, fines, and minerals.

Mounted on a rugged wheeled chassis, it features quick hydraulic setup, onboard power options, and adjustable screen angles (typically 30°–45°). Ideal for tertiary and quaternary applications, it offers high throughput in a compact, easily transportable design.

5 Operating positions between **45° to 35°**

Superior
Screening Redefined

Customizable Vibration Speed for Material-Specific Screening

3600 RPM
Optionally extendable
upto **4200** RPM

This operates at a standard 3600 RPM, delivering consistent high-frequency motion ideal for fine material separation. For applications demanding higher stratification and sharper cuts, optional 4200 RPM motors are available. The increased frequency enhances acceleration, reduces blinding, and improves screening efficiency—especially for ultra-fine materials.

This flexibility allows operators to optimize performance based on material characteristics and application requirements.

Auto-Aligning Feed Distributor

This high-frequency screen features an auto-aligning feed distributor that ensures uniform material flow across the deck. It self-adjusts to changing feed conditions, improving screening efficiency and accuracy. By reducing uneven loading and wear, it extends component life and minimizes downtime, ensuring consistent, high-performance screening in every application.

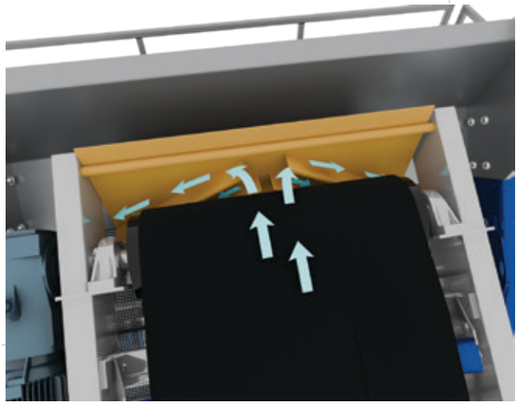

Heavy-Duty Wheels for Reliable On-Site Mobility

The heavy-duty twin-axle wheels, engineered for off-road mobility and long-term durability. Designed to handle dynamic loads of up to 20 tons, the wheels are mounted on high-strength suspension with industrial-grade tires rated for rugged terrain. These components enable quick transport, stable setup, and repositioning without the need for cranes—making the unit ideal for high-production sites requiring frequent relocations and minimal downtime.

WHS 5518 with grid and

Hydraulic side conveyors

Unit Weight
30,119 kg
66,400 lbs

Working Dimensions

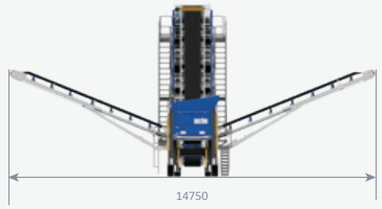

Transport Dimensions

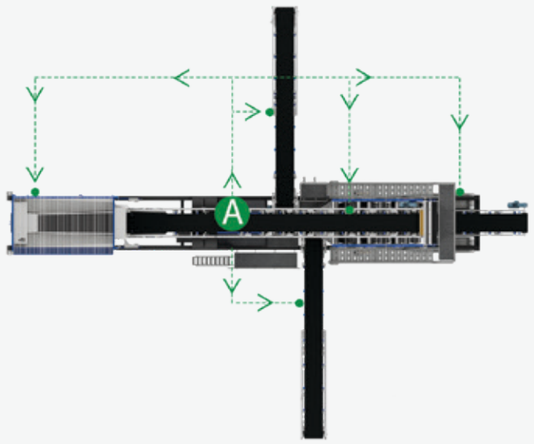

Hydraulic Side Conveyors

Powered by an onboard hydraulic system, these conveyors can be quickly folded or deployed at the touch of a lever, eliminating the need for manual handling or additional lifting equipment. The hydraulically adjustable positioning allows operators to align material discharge precisely, ensuring clean stockpile formation and minimizing spillage.

Whether operating in aggregates, sand, mineral processing, or contract screening, hydraulic side conveyors help maximize productivity by providing dependable, low-maintenance material transfer while keeping the entire screening process mobile, efficient, and operator-friendly.

WHS 5518 with grid and hydraulic side conveyors

Screen size	1830 x 5490 mm
Feeder grid	3810 x 2100 x 1115 mm
Max screen elevation	45°
Feed conveyor angle	27°
No. of mesh	6
Drive motors	13 x 1.3 kW

WHS 5518 with grid

Unit Weight
25,600 kg
56,438 lbs

Feeder gridbox

Working Dimensions

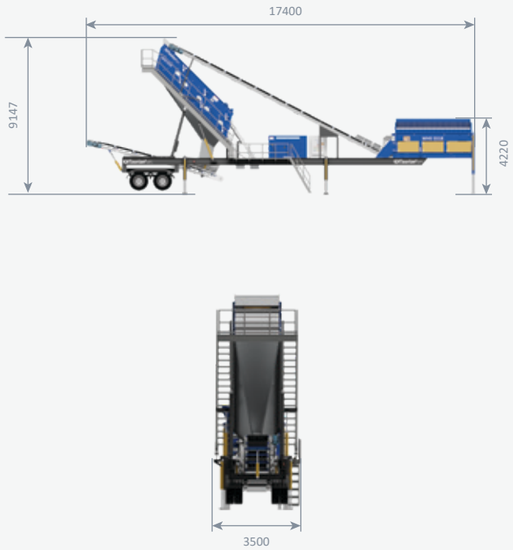

Transport Dimensions

WHS 5518 with grid

Screen size	1830 x 5490 mm
Feeder grid	3810 x 2100 x 1115 mm
Max screen elevation	45°
Feed conveyor angle	27°
No. of mesh	6
Drive motors	13 x 1.3 kW

WHS 5518 without grid

Unit Weight
16,450 kg
36,266 lbs

High Frequency Screen

Vibrating Screen
One (1) HFS 5518-2D hyperscreen
5.5’ x 18’ high-frequency screen top and bottom deck
Top and bottom deck are driven by thirteen (13) electric vibrators (0- 3000 RPM) mounted below screens for directly induced vibrating action
All vibrators have force amplitude settings on adjustable slip counterweights
Top and bottom decks have individual VFD’s (2)
Hydraulic controls for variable angle operation
Top and bottom deck discharge chutes
Aggregate spreader
Fixed access ladder with wrap around walkway
Standard screen cloth with rotary tensioning system

Working Dimensions

Transport Dimensions

WHS 5518 without grid

Screen size	1830 x 5490 mm
Max screen elevation	45°
Feed conveyor angle	27°
No. of mesh	6
Drive motors	13 x 1.3 kW

Taurian MPS reserves the right to make changes in specifications and other information contained in this publication without prior notice and the reader/ customer should in all cases consult Taurian MPS to determine whether any such changes have been made. This publication may / may not be reproduced and is intended for the exclusive use of Taurian MPS customer. Please note all technical specifications are indicative and may vary based on material, design modifications, or location-specific requirements.

No statement contained in this publication, including statements regarding capacity, suitability, or performance of products, shall be considered a warranty by Taurian MPS for any purpose or give rise to any liability of Taurian MPS.

Taurian MPS©2026. All rights reserved.

When only the best will do,

choose Taurian MPS.

TAURIAN MPS
HEADQUARTER

201-C, POONAM CHAMBERS A WING,
DR.ANNIE BESANT ROAD, WORLI,
MUMBAI 400 018
MAHARASHTRA

CONTACT : +91 22 4967 0682

TAURIAN MPS
FACTORY

KHASRA NO. 260/267,
LAKESHWARI BHAGWANPUR,
HARIDWAR 247661
UTTARAKHAND, INDIA

CONTACT : +91 86790 22057

Taurian® MPS